SG3400/3125/2500HV-20

SUNGROW
Clean power for all

Turnkey Station for 1500 Vdc System

HIGH YIELD

- Advanced three-level technology, max. inverter efficiency 99 %

EASY O&M

- Integrated current and voltage monitoring function for online analysis and fast trouble shooting
- Modular design, easy for maintenance
- Convenient external touch screen

SAVED INVESTMENT

- Low transportation and installation cost due to 10-foot container design
- DC 1500 V system, low system cost
- Q at night function optional

GRID SUPPORT

- Compliance with standards: IEC 62116, IEC 61727
- Low/High voltage ride through (L/HVRT)
- Active & reactive power control and power ramp rate control

CIRCUIT DIAGRAM

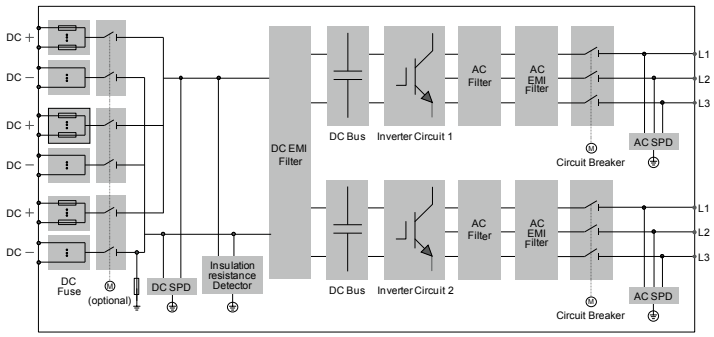

EFFICIENCY CURVE (SG3400HV-20)

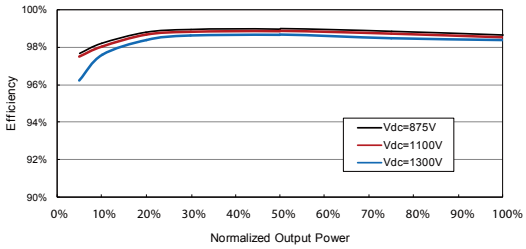

© 2019 Sungrow Power Supply Co., Ltd. All rights reserved. Subject to change without notice. Version 1.4

Type designation	SG3400HV-20	SG3125HV-20	SG2500HV-20
Input (DC)			
Max. PV input voltage	1500 V		
Min. PV input voltage / Startup input voltage	875 V / 915 V	875 V / 915 V	800 V / 840 V
MPP voltage range for nominal power	875 – 1300 V	875 – 1300 V	800 – 1300 V
No. of independent MPP inputs	1		
No. of DC inputs	18(optional: 22/24 inputs negative grounding or floating; 28 inputs negative grounding)		18 – 24
Max. PV input current	4178 A	4178 A	3508 A
Max. DC short-circuit current	5000 A	5000 A	4800 A
Output (AC)			
AC output power	3593 kVA @ 25˚C / 3437 kVA @ 45˚C	3593 kVA@ 25˚C / 3437 kVA@ 45˚C / 3125 kVA@ 50˚C	2750 kVA@ 45˚C / 2500 kVA@ 50˚C
Max. AC output current	3458 A	3458 A	2886 A
Nominal AC voltage	600 V	600 V	550 V
AC voltage range	480 – 690 V	480 – 690 V	495 – 605 V
Nominal grid frequency / Grid frequency range	50 Hz / 45 – 55 Hz, 60 Hz / 55 – 65 Hz		
THD	< 3 % (at nominal power)		
DC current injection	< 0.5 % In		
Power factor at nominal power / Adjustable power factor	> 0.99 / 0.8 leading – 0.8 lagging		
Feed-in phases / Connection phases	3 / 3		
Efficiency			
Inverter Max. efficiency	99.0%		
Inverter Euro. efficiency	98.7%		
Protection and Function			
DC input protection	Load break switch + fuse		
AC output protection	Circuit breaker		
Overvoltage protection	DC Type I + II / AC Type II		
Grid monitoring / Ground fault monitoring	Yes / Yes		
Insulation monitoring	Yes		
Overheat protection	Yes		
Q at night function	Optional		
General Data			
Dimensions (W*H*D)	2991*2591*2438 mm		
Weight	6.5 T		
Isolation method	Transformerless		
Degree of protection	IP55	IP55	IP54
Operating ambient temperature range	-35 to 60˚C (> 45˚C derating)	-35 to 60˚C (> 50˚C derating)	-35 to 60˚C (> 50˚C derating)
Allowable relative humidity range (non-condensing)	0 – 95 %		
Cooling method	Temperature controlled forced air cooling		
Max. operating altitude	4000 m (> 2300 m derating)	4000 m (>3000 m derating)	4000 m (> 2000 m derating)
Display	Touch screen		
Communication	Standard: RS485, Ethernet; Optional: optical fiber		
Compliance	CE, IEC 62109, IEC 61727, IEC 62116		
Grid support	Q at night function (optional), L/HVRT, active & reactive power control and power ramp rate control		

© 2019 Sungrow Power Supply Co., Ltd. All rights reserved. Subject to change without notice. Version 1.4